1. General Description

A: COMPONENT

1. AIR CLEANER

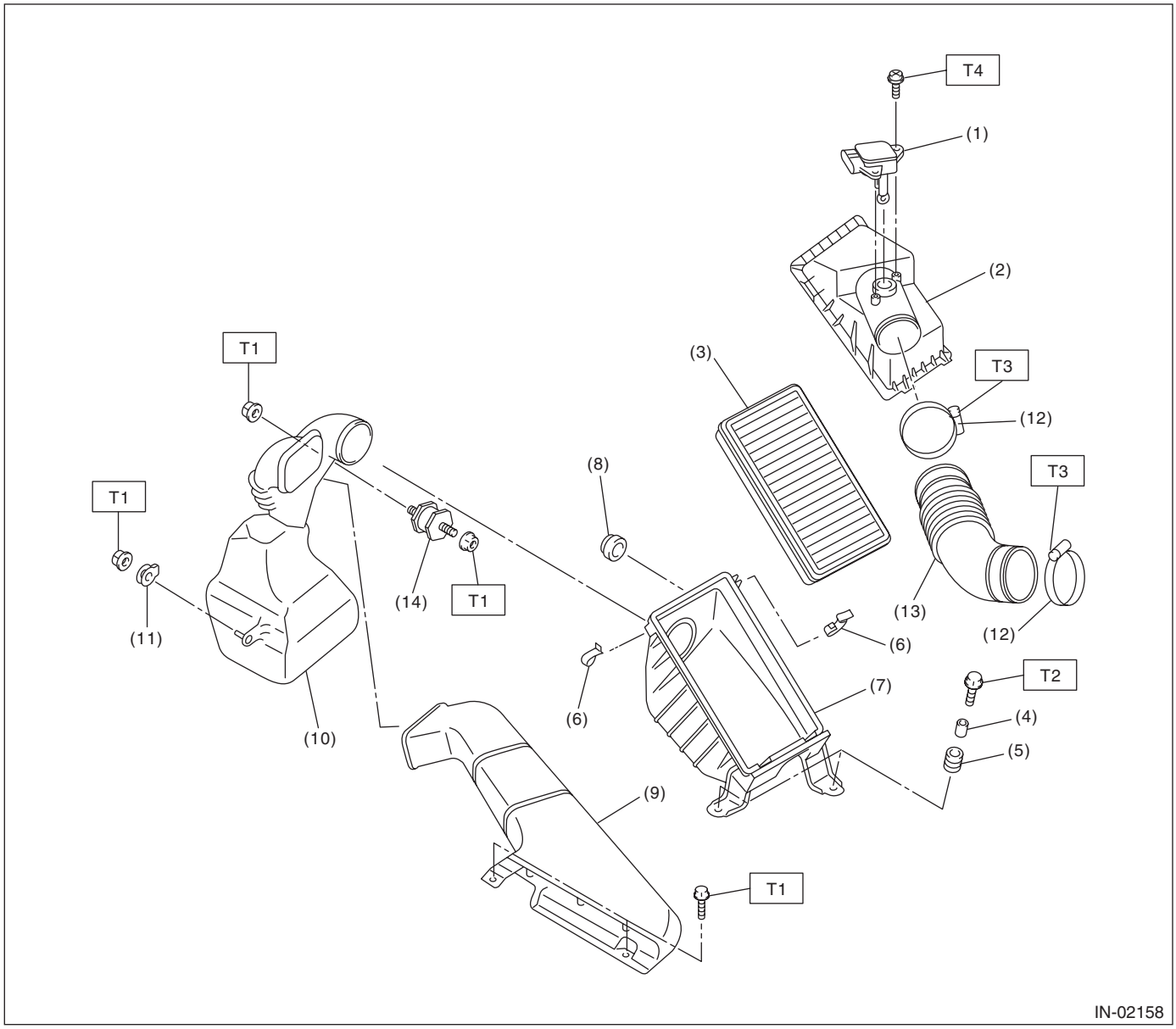

(1)	Mass air flow and intake air temperature sensor	(7)	Air cleaner lower case	(14)	Cushion
(2)	Air cleaner upper cover	(8)	Cushion rubber		
(3)	Air cleaner element	(9)	Air intake duct		
(4)	Spacer	(10)	Resonator chamber ASSY		
(5)	Bushing	(11)	Cushion rubber		
(6)	Clip	(12)	Clamp		
		(13)	Air intake boot		

Tightening torque:N·m (kgf-m, ft-lb)

T1: 7.5 (0.76, 5.5)
T2: 33 (3.4, 24.6)
T3: 2.5 (0.25, 1.8)
T4: 1.0 (0.1, 0.7)

2. INTAKE DUCT

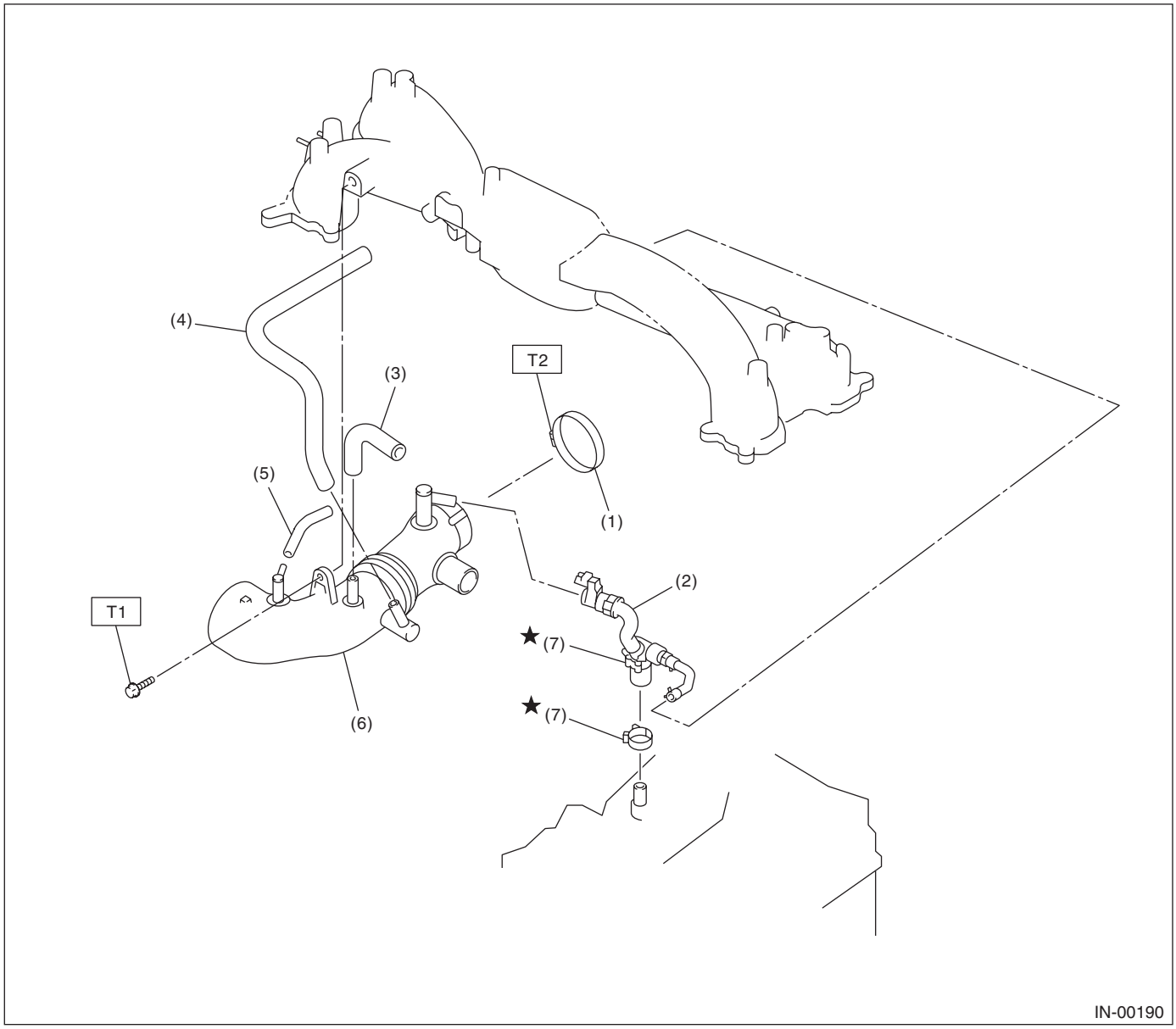

(1)	Clamp	(5)	Air by-pass hose C	***Tightening torque:N·m (kgf-m, ft-lb)***
(2)	PCV hose ASSY	(6)	Intake duct	***T1: 19 (1.9, 14.0)***
(3)	Air by-pass hose A	(7)	Clamp	***T2: 3 (0.3, 2.2)***
(4)	Air by-pass hose B			

3. INTERCOOLER

- Except for STI model

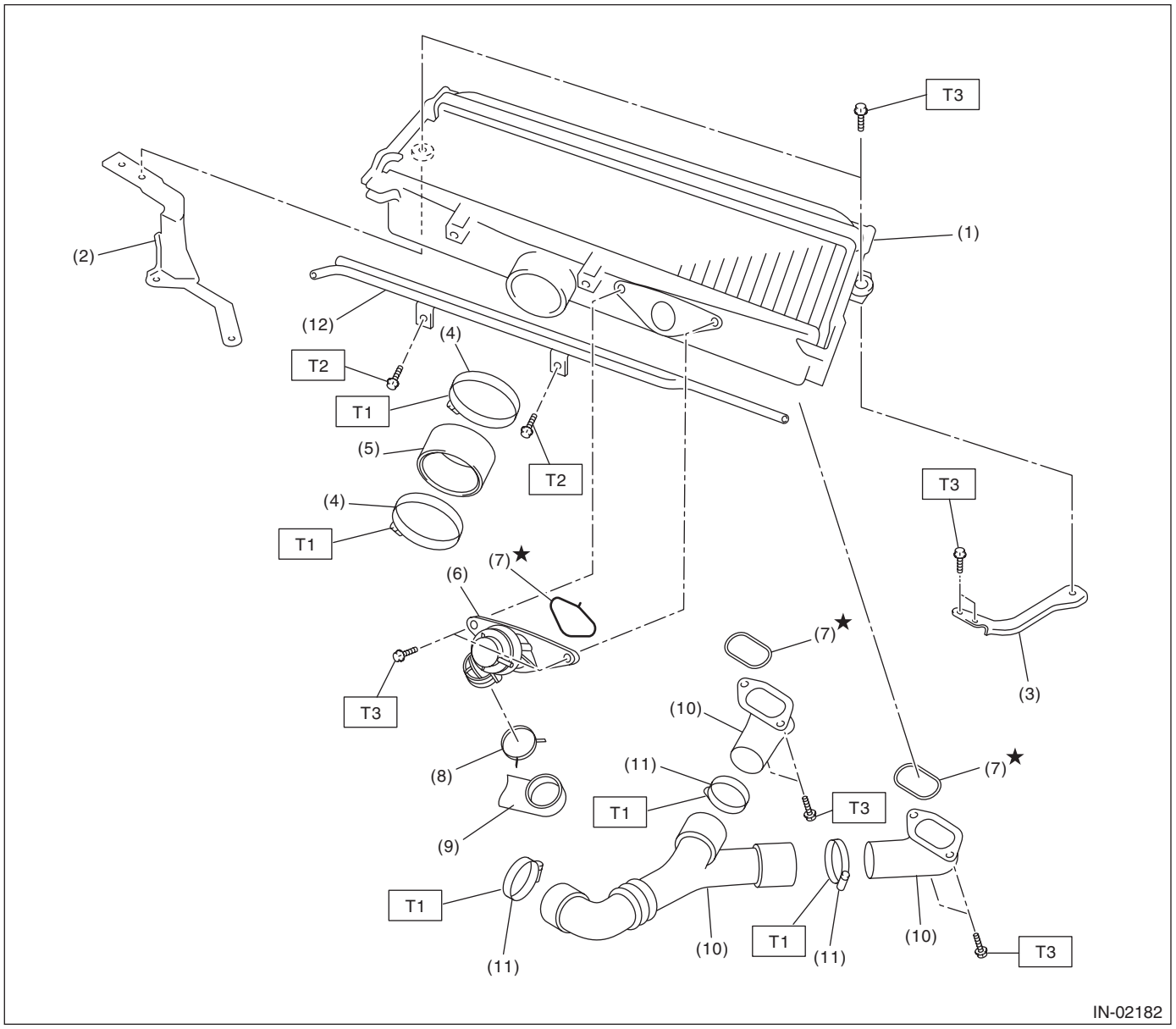

(1)	Intercooler	(7)	O-ring
(2)	Intercooler bracket RH	(8)	Clamp
(3)	Intercooler bracket LH	(9)	Air by-pass hose A
(4)	Clamp	(10)	Intercooler duct
(5)	Air intake duct	(11)	Clamp
(6)	Air by-pass valve	(12)	PCV pipe

Tightening torque:N·m (kgf-m, ft-lb)

T1: 3 (0.3, 2.2)
T2: 6.3 (0.64, 4.6)
T3: 16 (1.6, 11.6)

- STI model

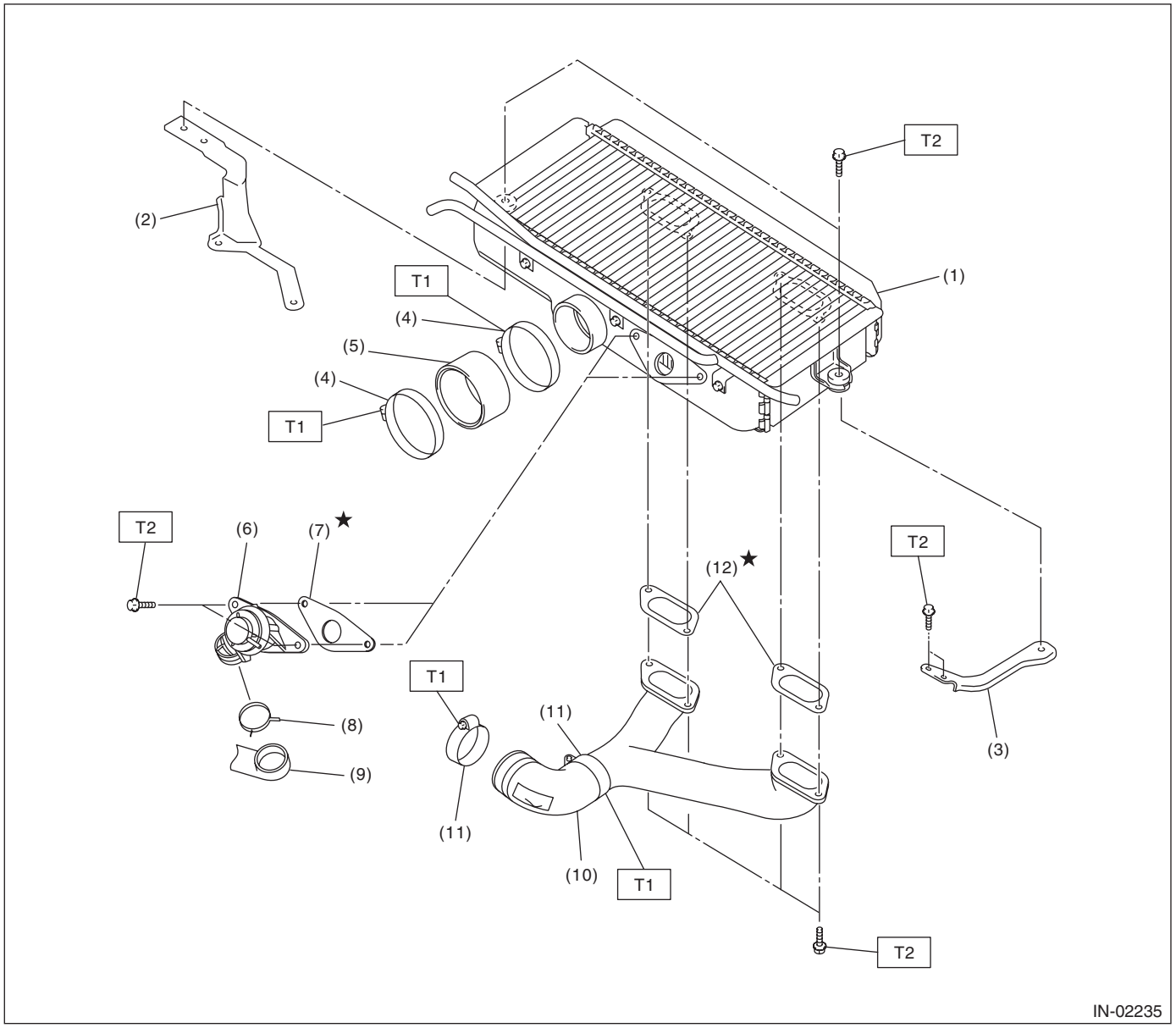

(1)	Intercooler	(7)	Gasket	(12)	Gasket
(2)	Intercooler bracket RH	(8)	Clamp		
(3)	Intercooler bracket LH	(9)	Air by-pass hose A		
(4)	Clamp	(10)	Intercooler duct		
(5)	Air intake duct	(11)	Clamp		
(6)	Air by-pass valve				

Tightening torque:N·m (kgf-m, ft-lb)

T1: 3 (0.3, 2.2)

T2: 16 (1.6, 11.8)

4. TURBOCHARGER

- Except for STI model

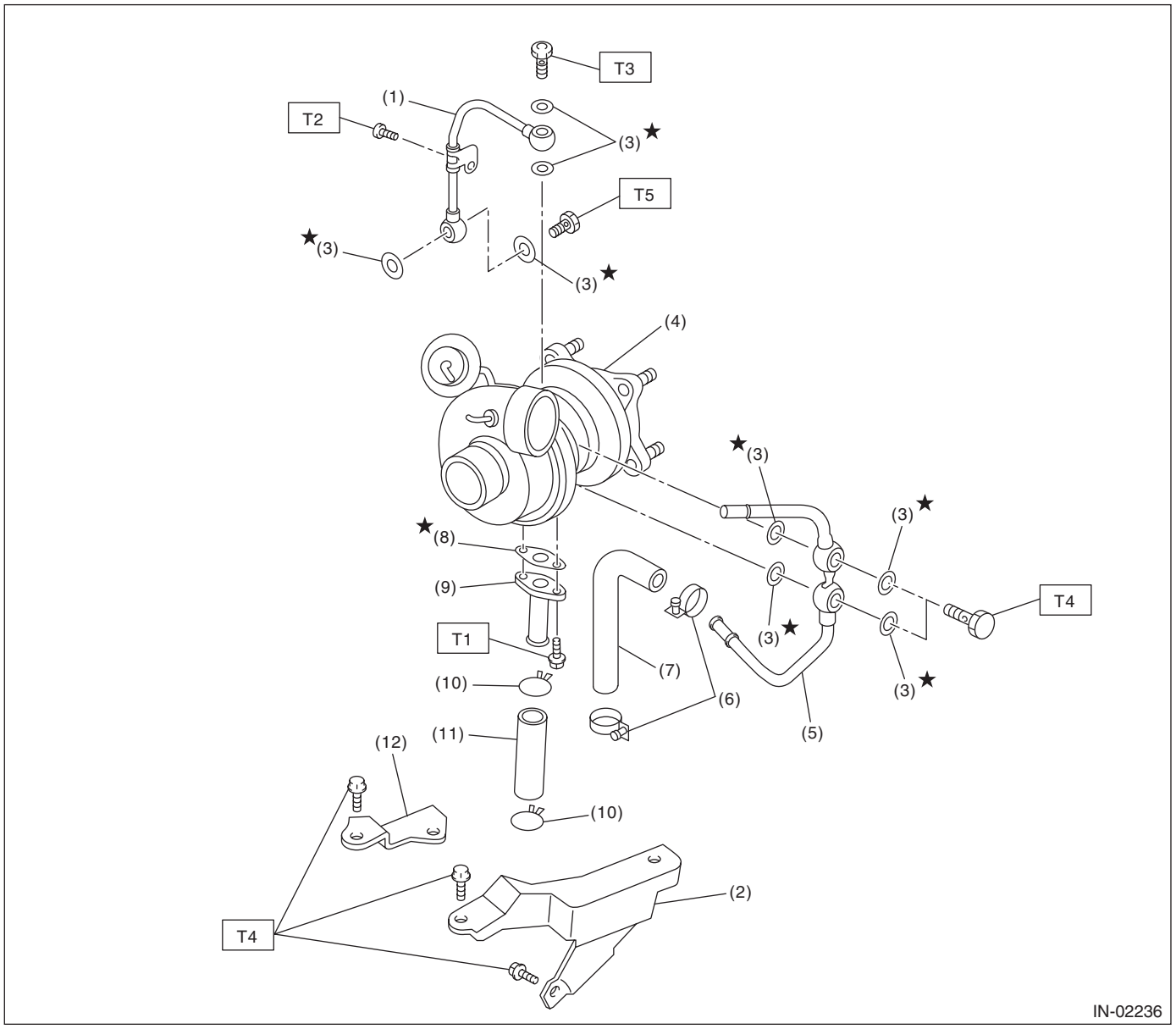

(1)	Oil inlet pipe	(7)	Engine coolant hose	***Tightening torque:N·m (kgf-m, ft-lb)***
(2)	Turbocharger bracket LH	(8)	Gasket	***T1: 4.4 (0.45, 3.3)***
(3)	Metal gasket	(9)	Oil outlet pipe	***T2: 4.9 (0.50, 3.6)***
(4)	Turbocharger	(10)	Clip	***T3: 16 (1.6, 11.8)***
(5)	Water pipe	(11)	Oil outlet hose	***T4: 33 (3.4, 24.6)***
(6)	Clamp	(12)	Turbocharger bracket RH	***T5: 29 (3.0, 21.7)***

- STI model

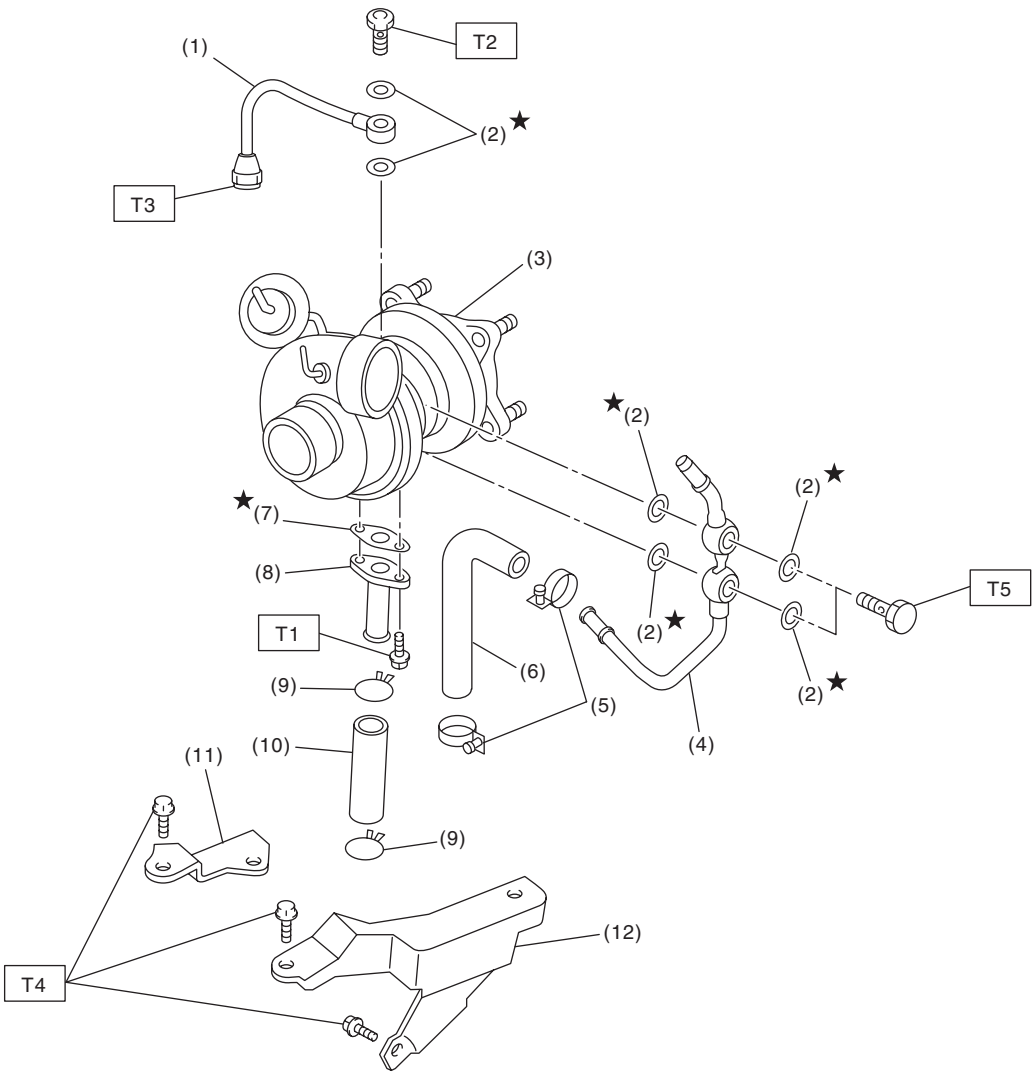

(1)	Oil inlet pipe	(7)	Gasket	***Tightening torque:N·m (kgf-m, ft-lb)***
(2)	Metal gasket	(8)	Oil outlet pipe	***T1: 4.4 (0.45, 3.3)***
(3)	Turbocharger	(9)	Clip	***T2: 16 (1.6, 11.8)***
(4)	Water pipe	(10)	Oil outlet hose	***T3: 20 (2.0, 14.8)***
(5)	Clamp	(11)	Turbocharger bracket RH	***T4: 33 (3.4, 24.6)***
(6)	Engine coolant hose	(12)	Turbocharger bracket LH	***T5: 29 (3.0, 21.7)***

5. INTERCOOLER WATER SPRAY

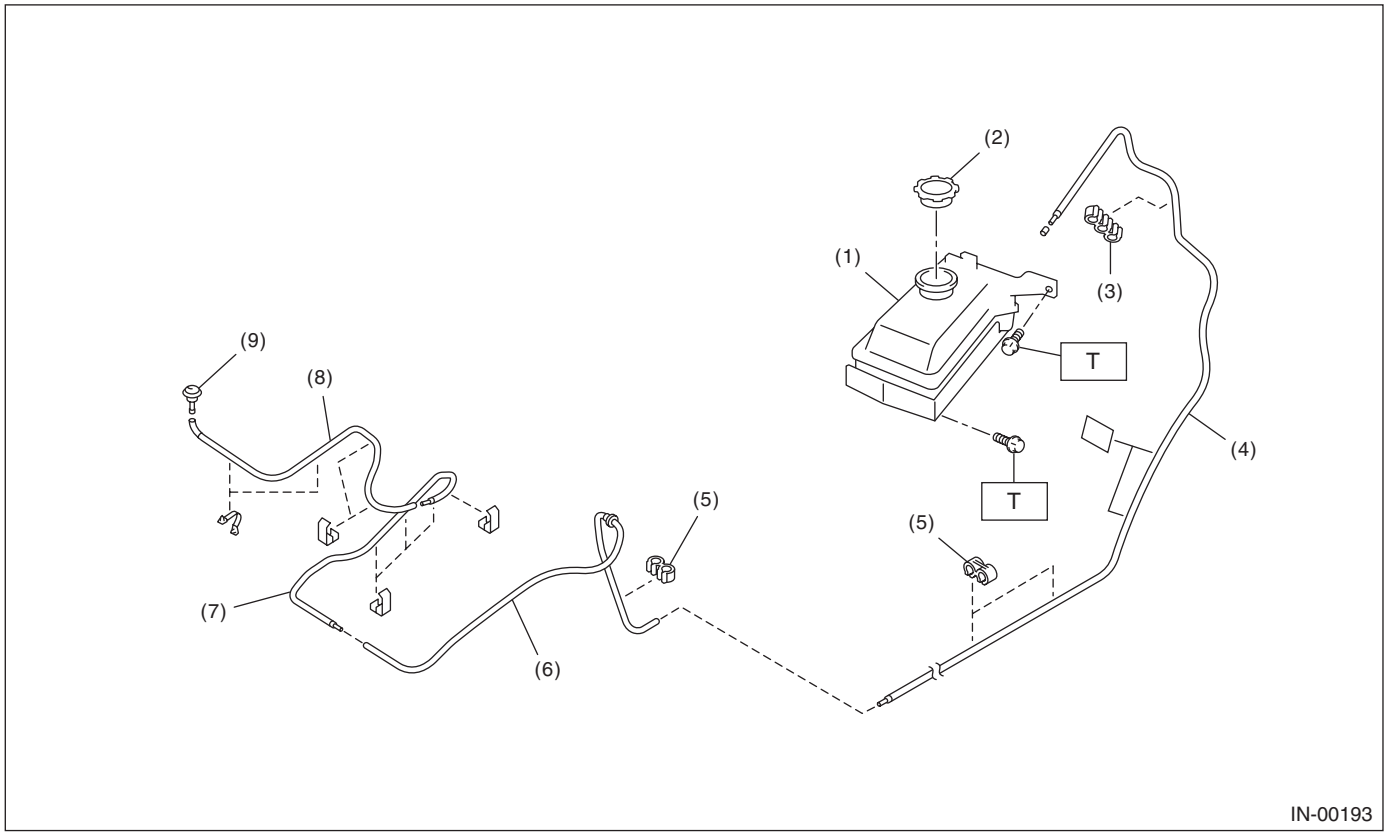

(1)	Water tank ASSY	(5)	Clamp	(9)	Nozzle
(2)	Water tank cap	(6)	Center hose		
(3)	Clamp	(7)	Front hose		
(4)	Rear hose	(8)	Intercooler hose		

Tightening torque:N·m (kgf-m, ft-lb)
T: 6 (0.6, 4.4)

B: CAUTION

- Wear appropriate work clothing, including a cap, protective goggles and protective shoes when performing any work.
- Remove contamination including dirt and corrosion before removal, installation or disassembly.
- Keep the disassembled parts in order and protect them from dust and dirt.
- Before removal, installation or disassembly, be sure to clarify the failure. Avoid unnecessary removal, installation, disassembly and replacement.
- Vehicle components are extremely hot after driving. Be wary of receiving burns from heated parts.
- Be sure to tighten fasteners including bolts and nuts to the specified torque.
- Place shop jacks or rigid racks at the specified points.
- Before disconnecting connectors of sensors or units, be sure to disconnect the ground cable from the battery.